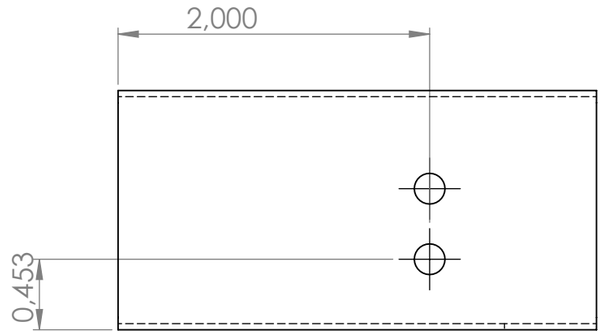

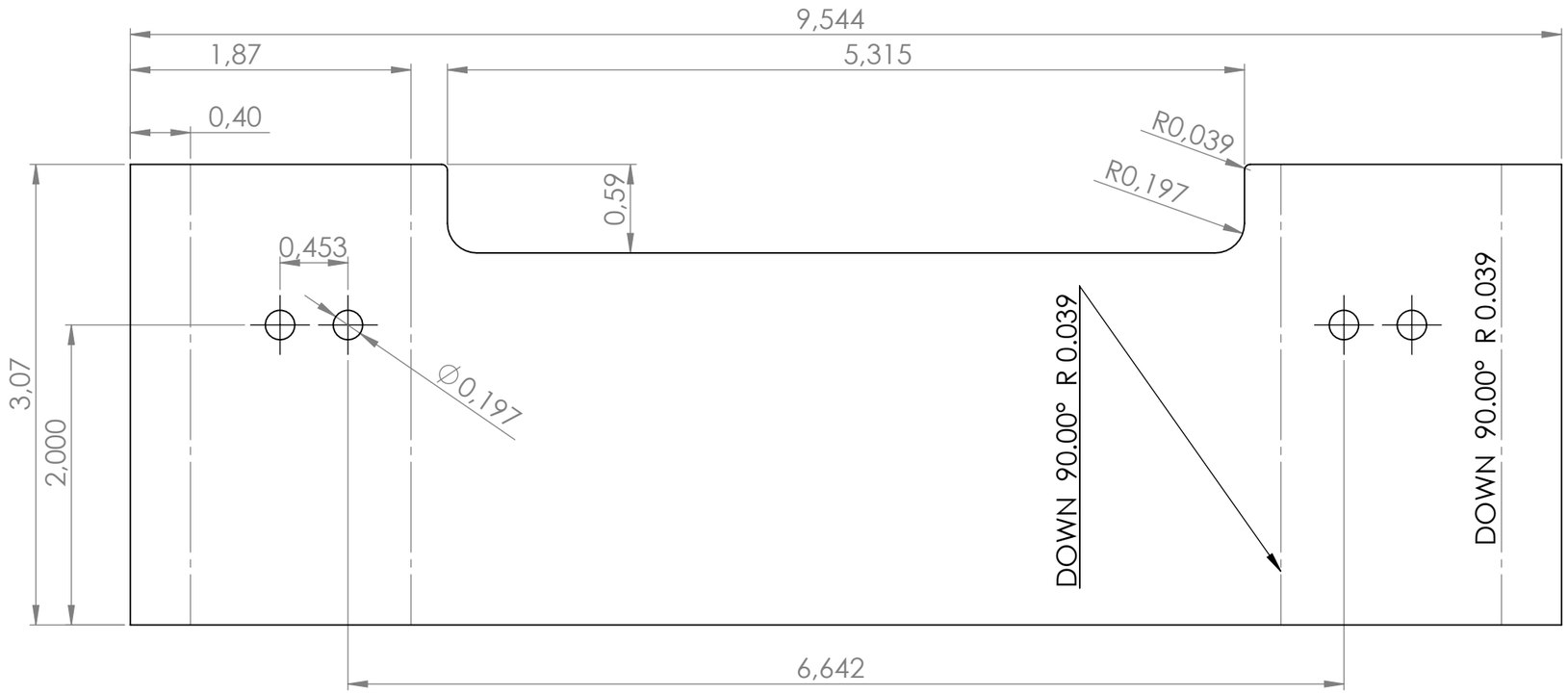

UNLESS OTHERWISE SPECIFIED: DIMENSIONS ARE IN MILLIMETERS SURFACE FINISH: TOLERANCES: LINEAR: ANGULAR:	FINISH:				DEBUR AND BREAK SHARP EDGES	DO NOT SCALE DRAWING / REVISION
	NAME	SIGNATURE	DATE			Stealth Machines
DRAWN						TITLE:
CHK'D						nighthawk
APPV'D						
MFG						
Q.A				MATERIAL:		DWG NO. card reader holder — A3
				WEIGHT:		SCALE:1:2 — SHEET 1 OF 1