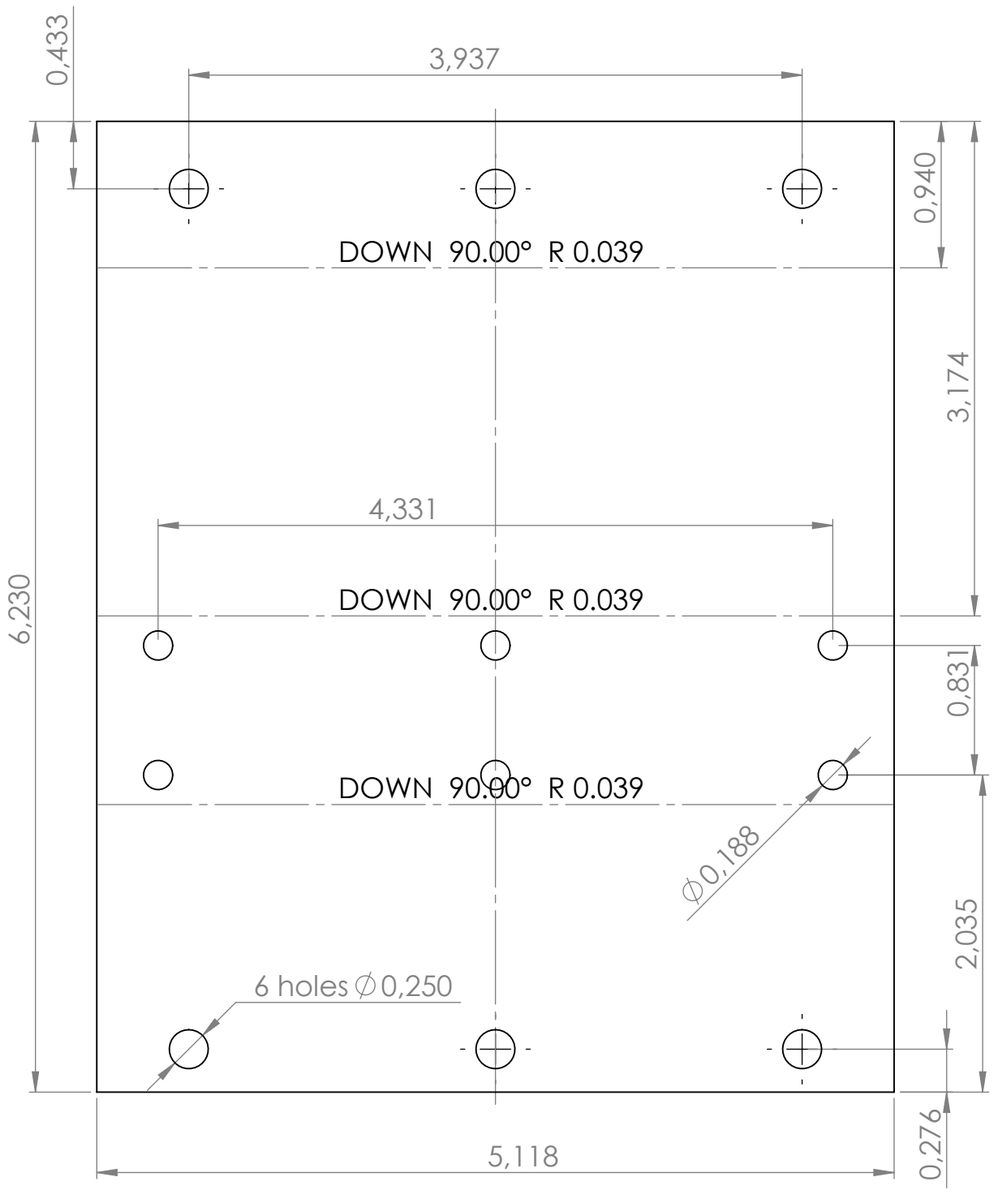

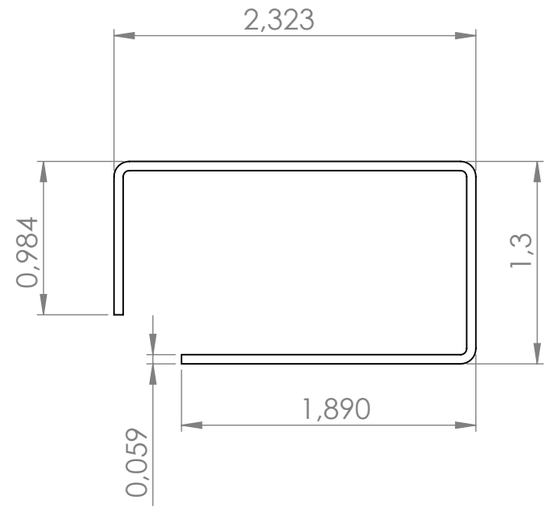

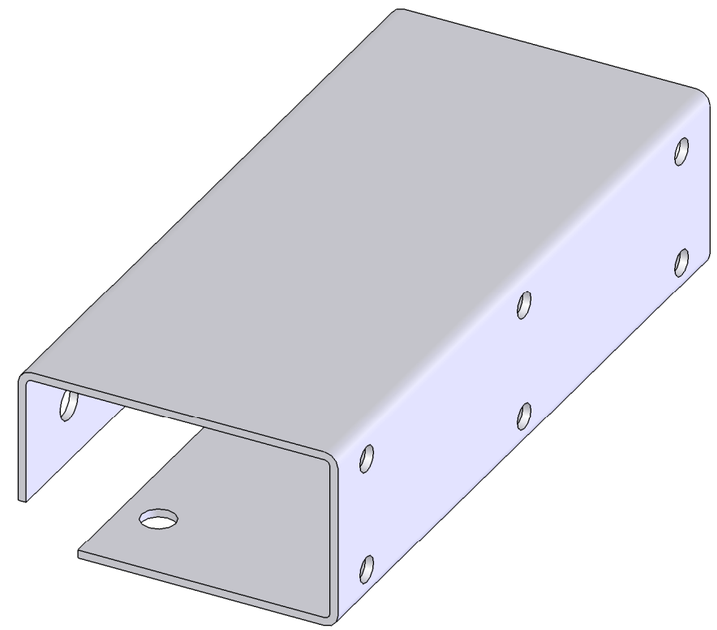

UNLESS OTHERWISE SPECIFIED: DIMENSIONS ARE IN MILLIMETERS SURFACE FINISH: TOLERANCES: LINEAR: ANGULAR:	FINISH:			DEBUR AND BREAK SHARP EDGES	DO NOT SCALE DRAWING	REVISION
					Stealth Machines	
	NAME	SIGNATURE	DATE		TITLE:	
DRAWN					nighthawk	
CHK'D						
APPV'D						
MFG						
Q.A				MATERIAL:	DWG NO. side fin support	A3
				WEIGHT:	SCALE:1:2	SHEET 1 OF 1